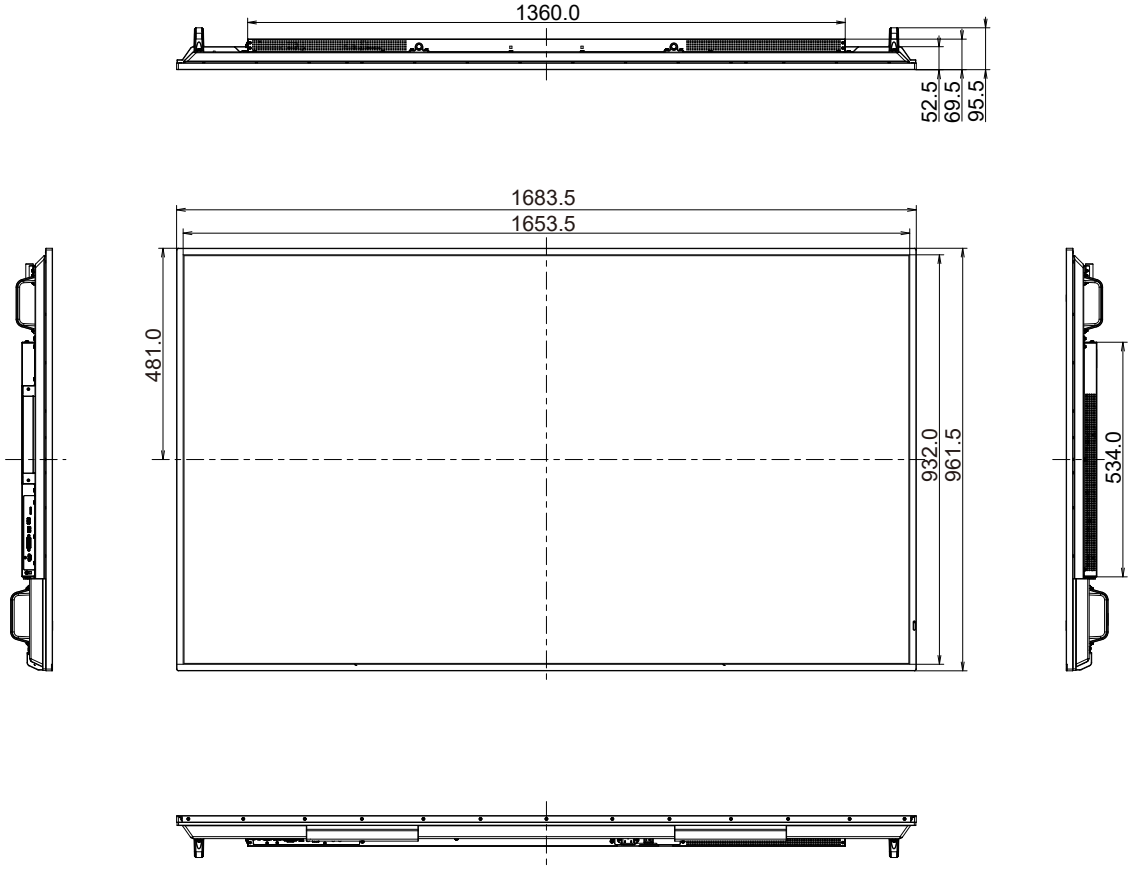
1360.0
52.5
69.5
95.5
1683.5
1653.5
481.0
932.0
961.5
534.0

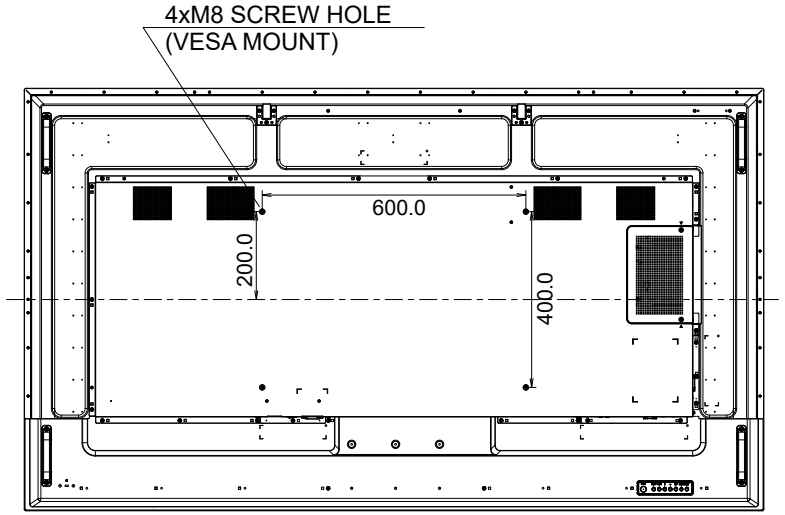
4xM8 SCREW HOLE
(VESA MOUNT)
600.0
200.0
400.0