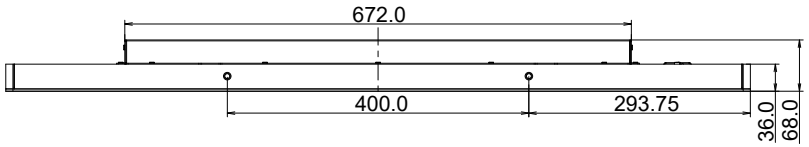
672.0
400.0
293.75
36.0
68.0

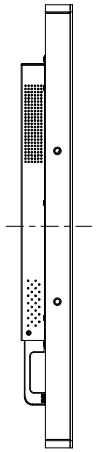

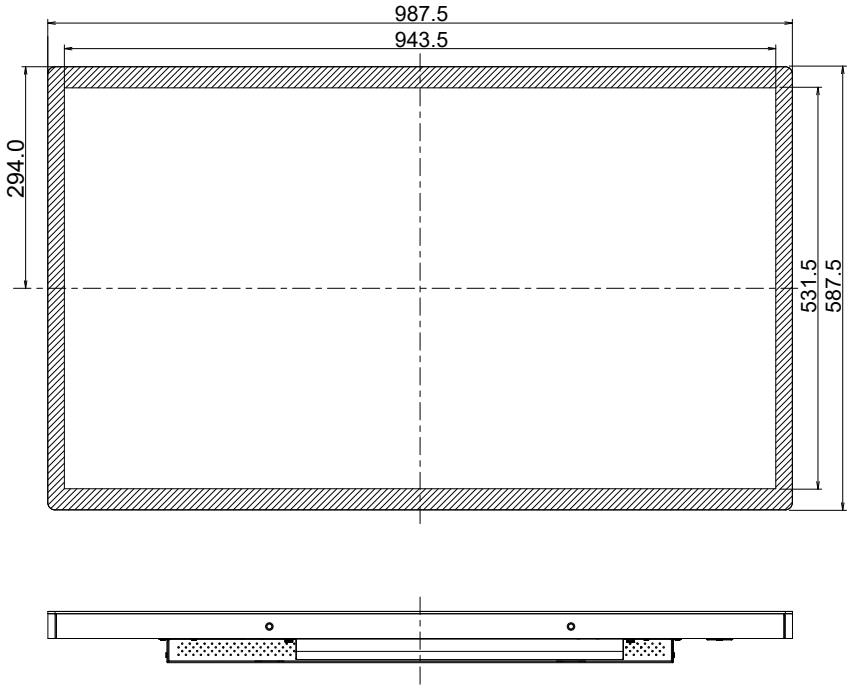
987.5
943.5
294.0
531.5
587.5

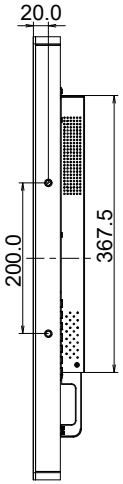
20.0
200.0
367.5

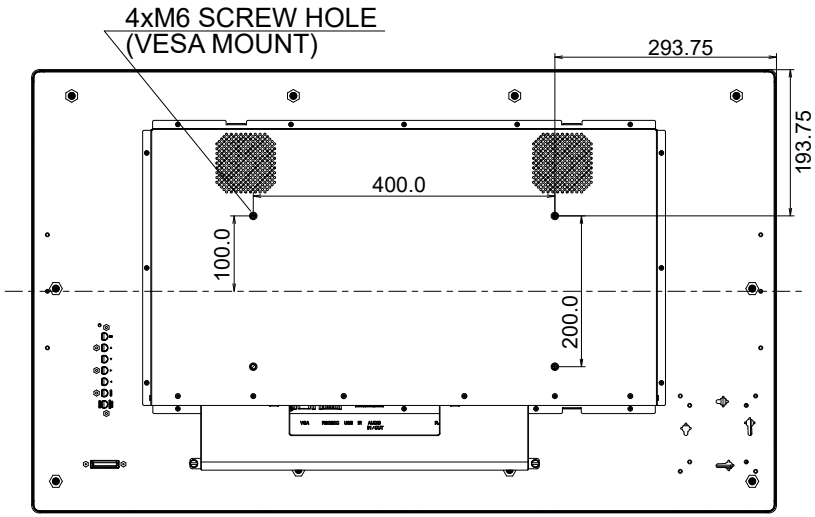
4xM6 SCREW HOLE
(VESA MOUNT)
293.75
193.75
400.0
100.0
200.0