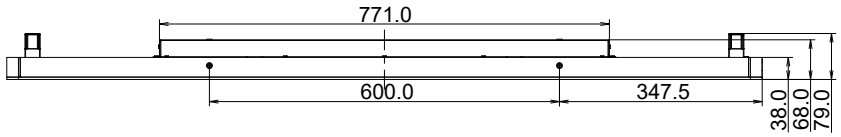
771.0
600.0
347.5
38.0
68.0
79.0

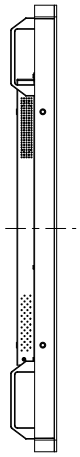

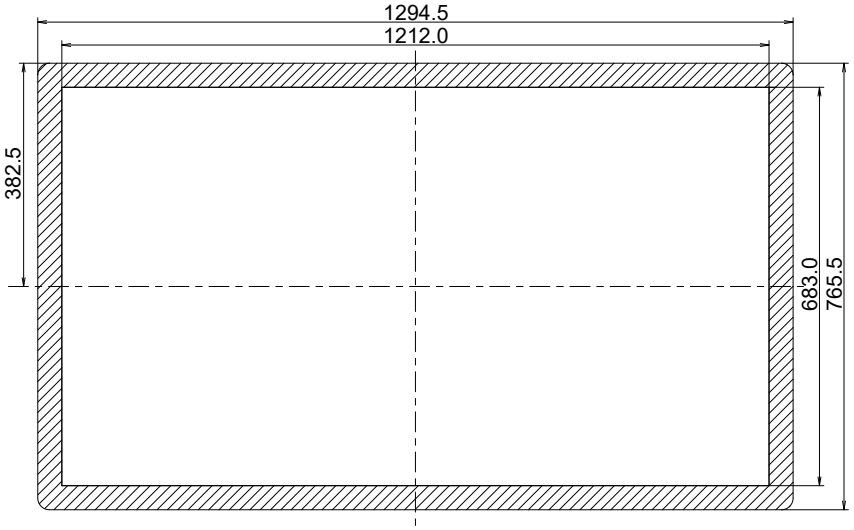
1294.5
1212.0
382.5
683.0
765.5

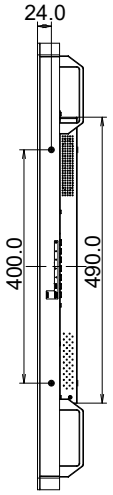
24.0
400.0
490.0

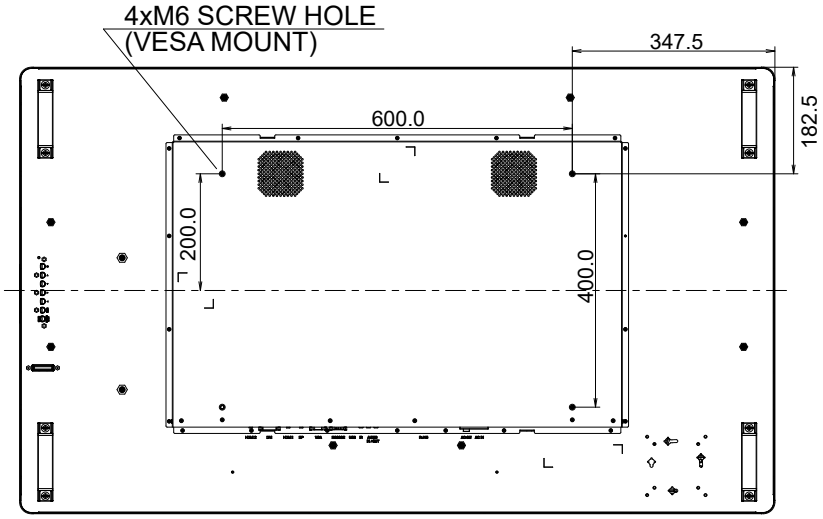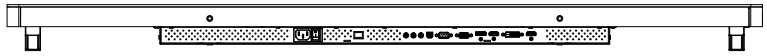
4xM6 SCREW HOLE
(VESA MOUNT)
347.5
600.0
182.5
200.0
400.0