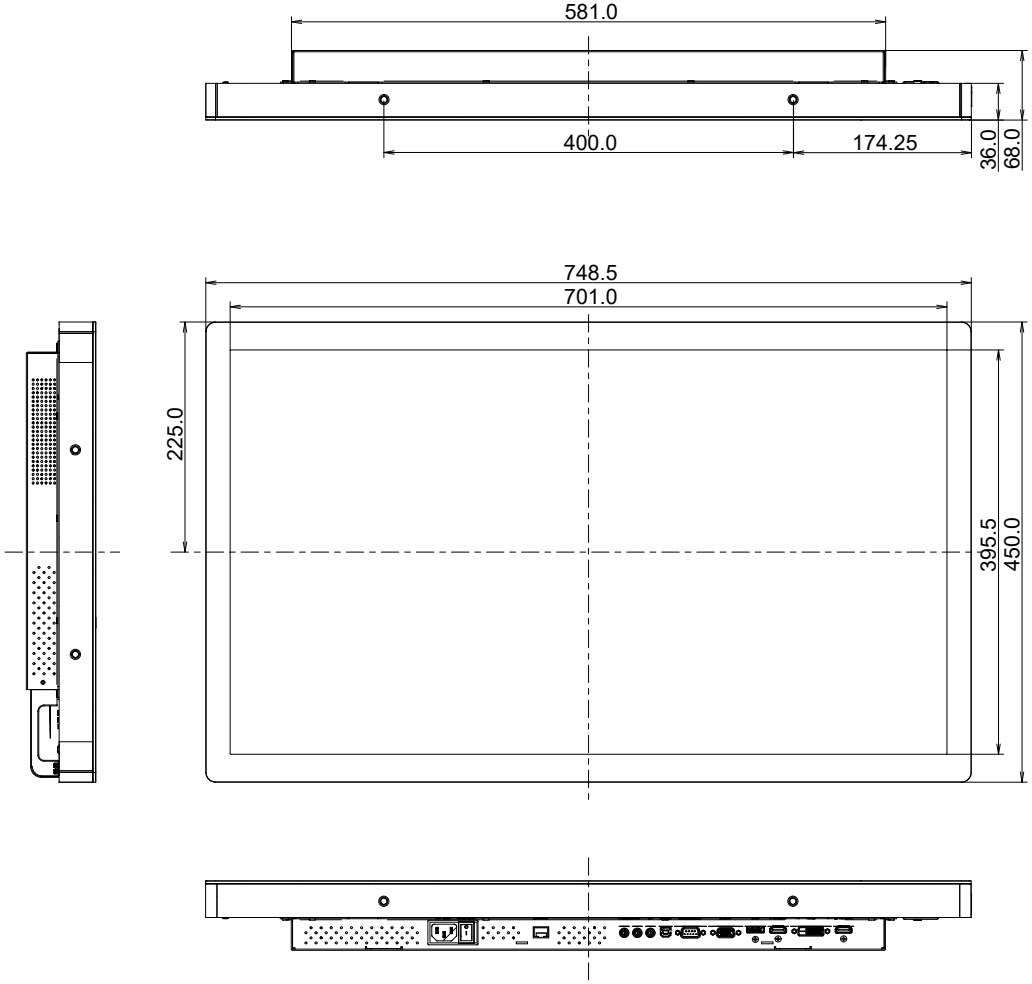
581.0
400.0
174.25
36.0
68.0
748.5
701.0
225.0
395.5
450.0
20.0
200.0
330.0

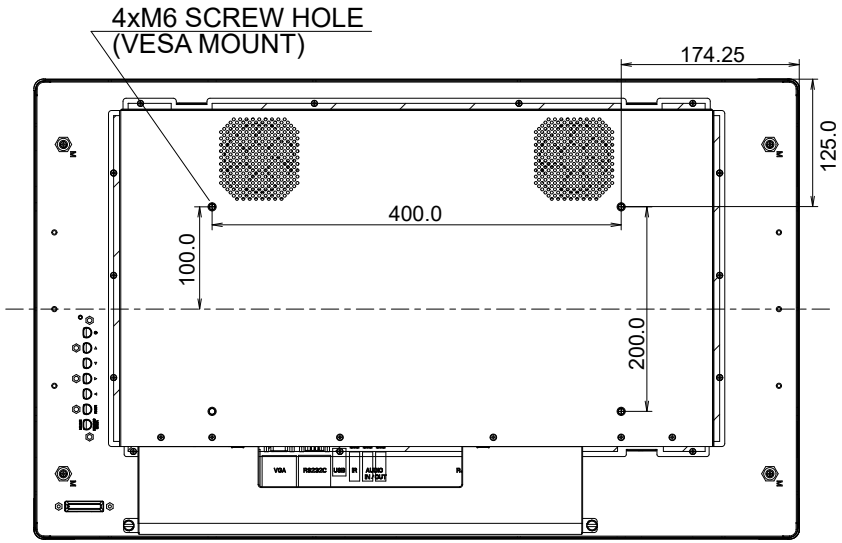
4xM6 SCREW HOLE
(VESA MOUNT)
174.25
125.0
400.0
100.0
200.0
VGA
RS232C
USB
IN
AUDIO
OUT
IN