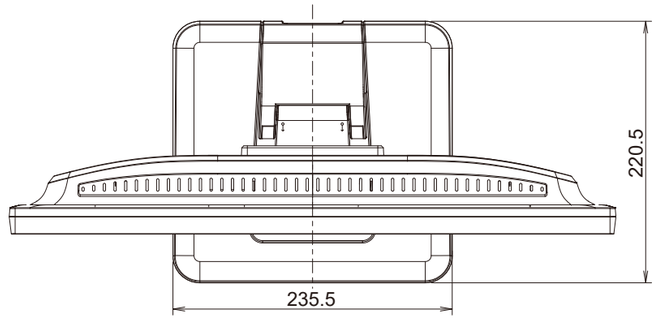
220.5
235.5

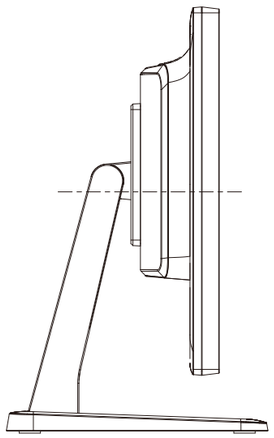

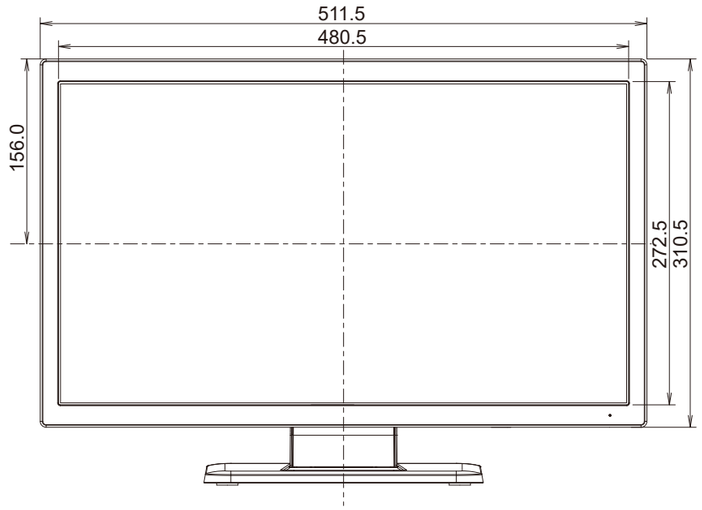
511.5
480.5
156.0
272.5
310.5

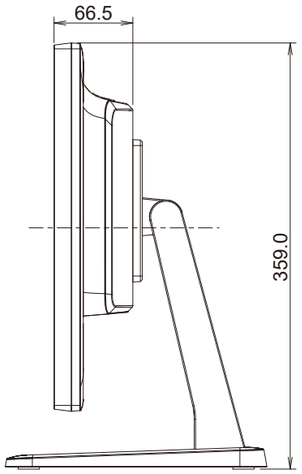
66.5
359.0

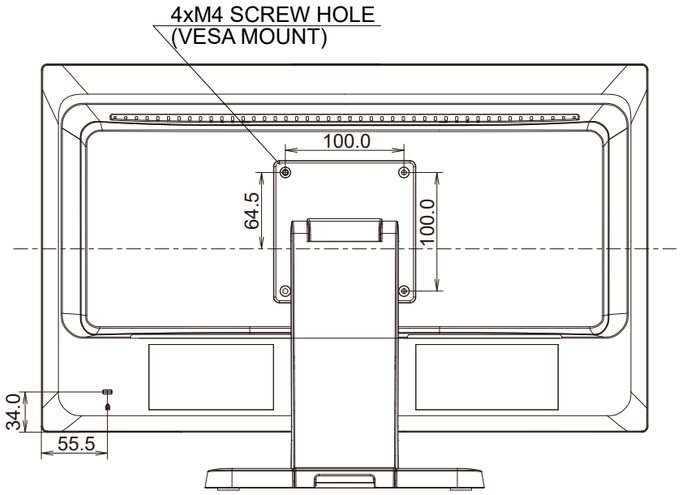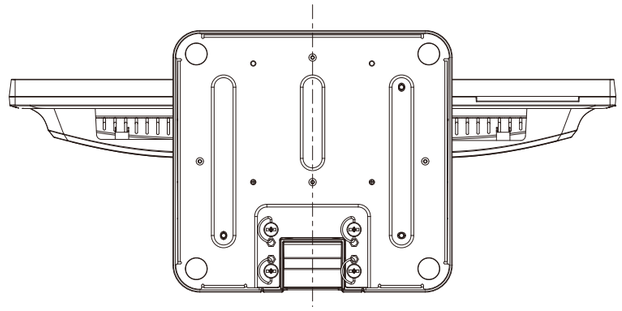
4xM4 SCREW HOLE
(VESA MOUNT)
100.0
64.5
100.0
34.0
55.5