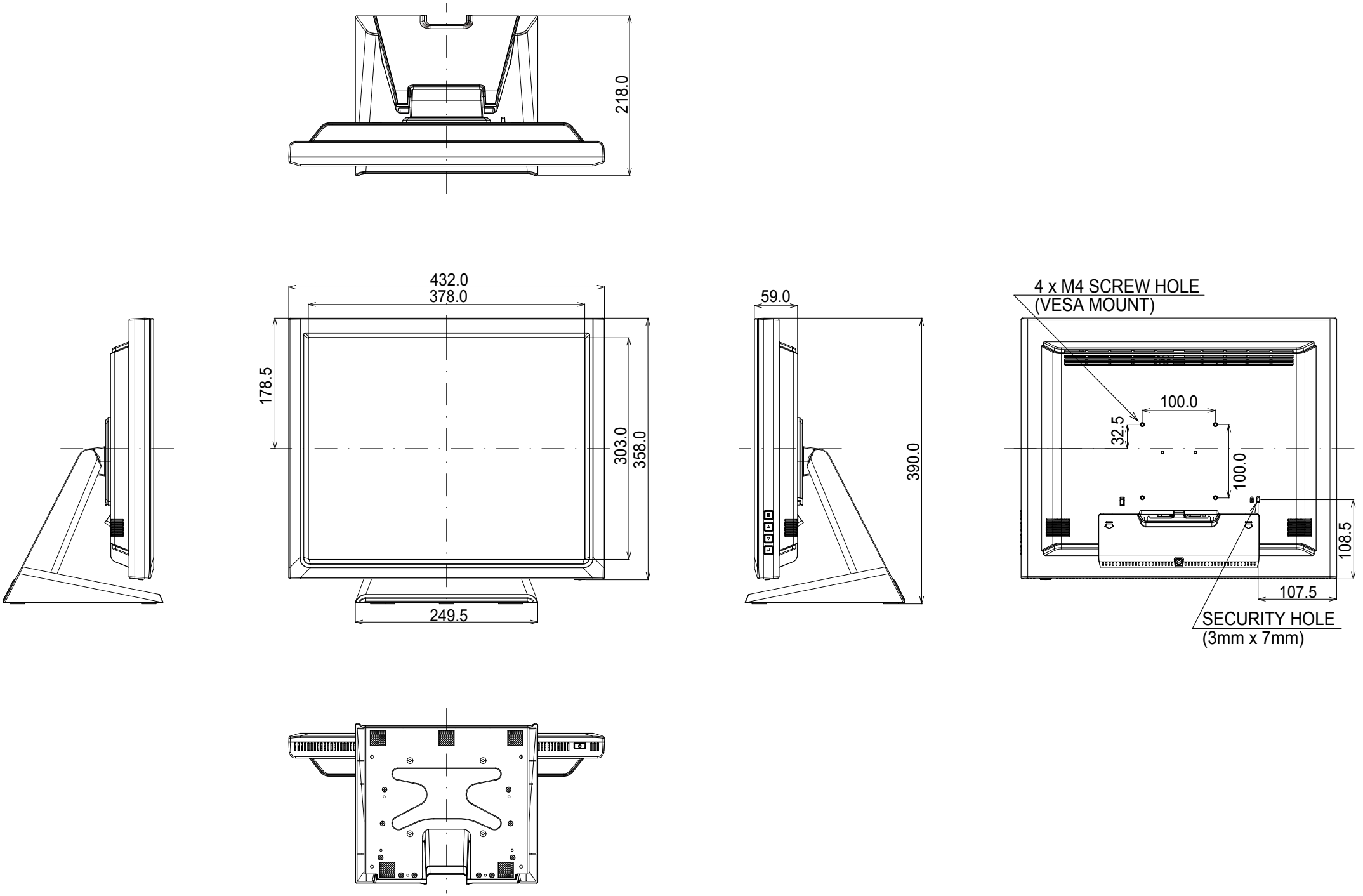
218.0
432.0
378.0
178.5
303.0
358.0
249.5
59.0
390.0
4 x M4 SCREW HOLE
(VESA MOUNT)
100.0
32.5
100.0
108.5
107.5
SECURITY HOLE
(3mm x 7mm)